Static

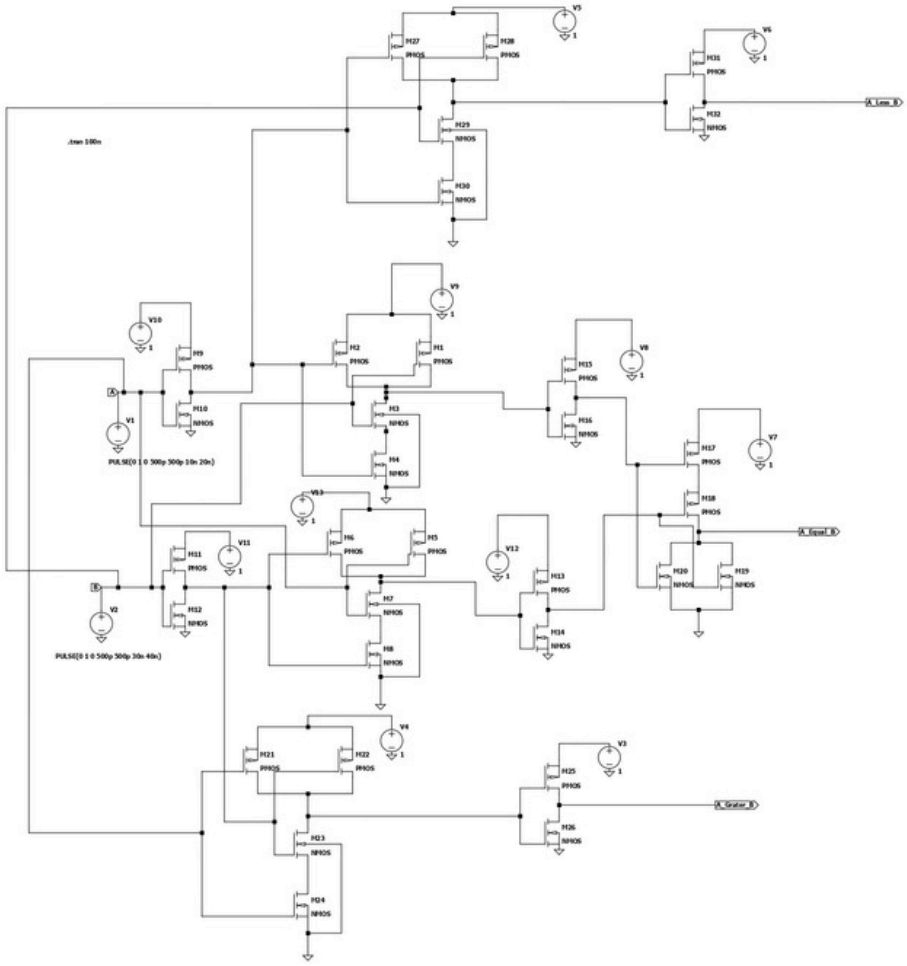

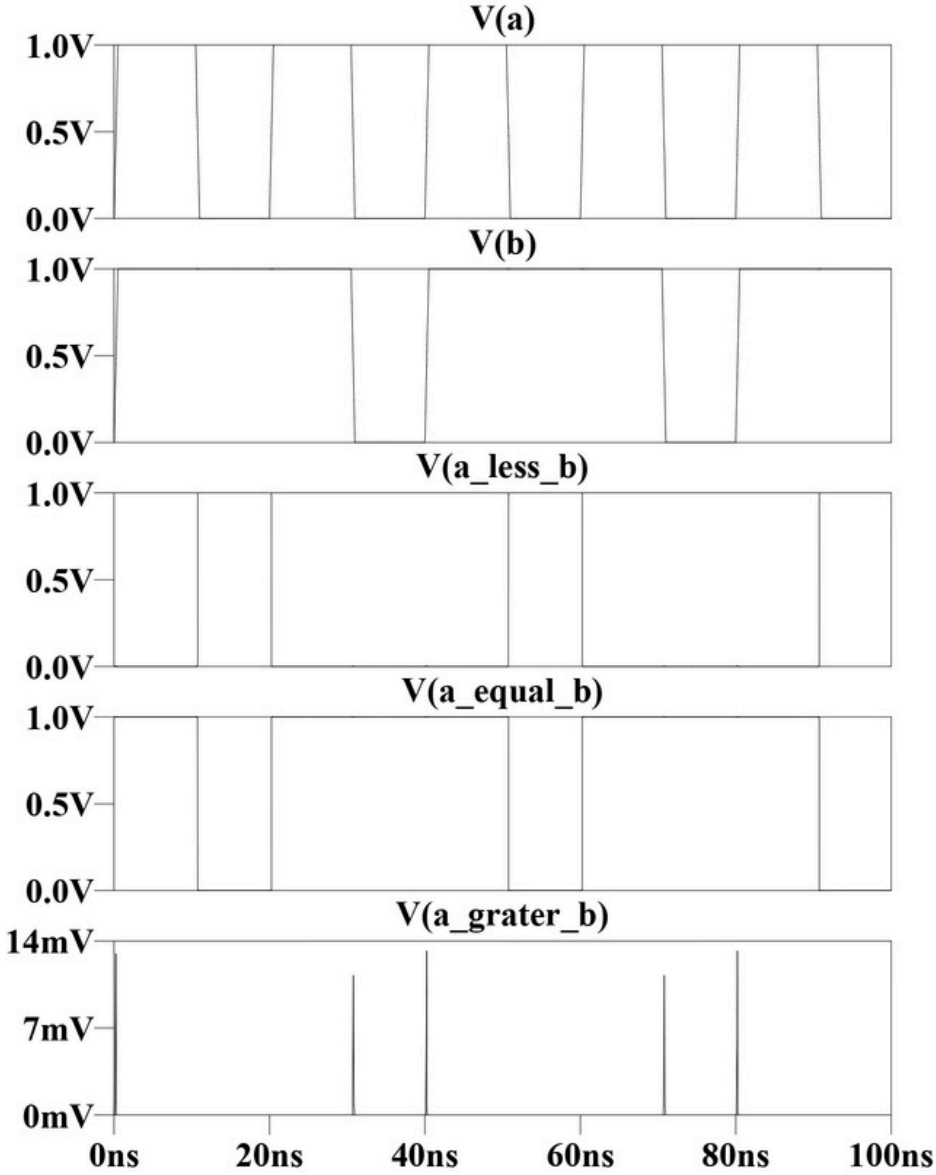
V(a)
1.0V
0.5V
0.0V
V(b)
1.0V
0.5V
0.0V
V(a_less_b)
1.0V
0.5V
0.0V
V(a_equal_b)
1.0V
0.5V
0.0V
V(a_grater_b)
14mV
7mV
0mV
0ns
20ns
40ns
60ns
80ns
100ns

TG

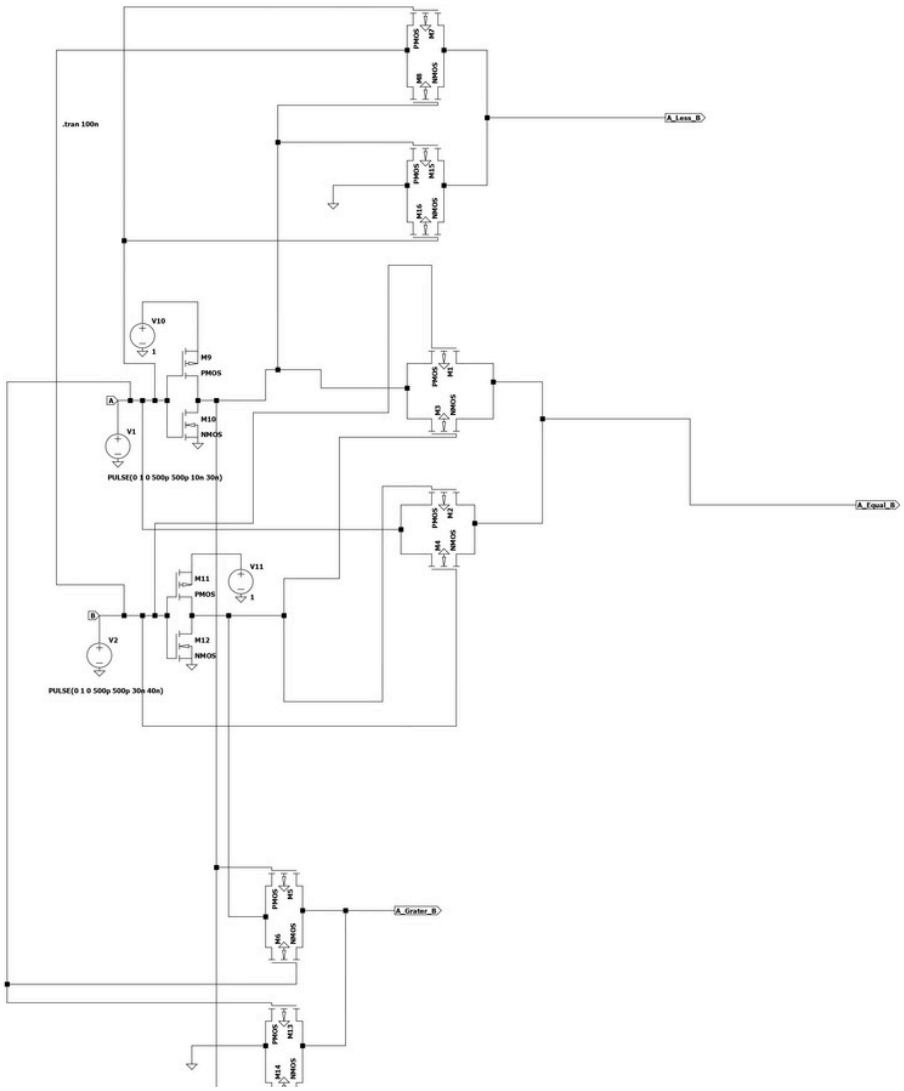
.tran 100n
A_Less_B
A_Equal_B
A_Grater_B
V10
M9
PMOS
M10
NMOS
V1
PULSE(0 1 0 500p 500p 10n 30n)
V11
M11
PMOS
M12
NMOS
V2
PULSE(0 1 0 500p 500p 30n 40n)

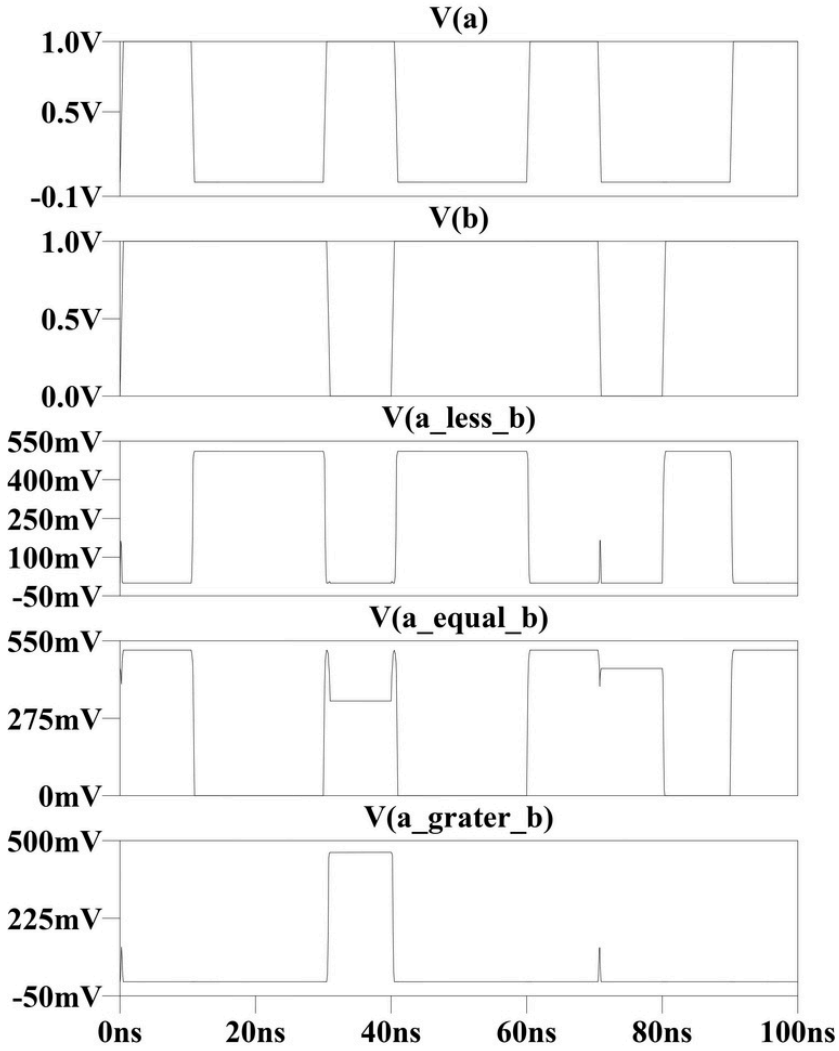
V(a)
1.0V
0.5V
-0.1V
V(b)
1.0V
0.5V
0.0V
V(a_less_b)
550mV
400mV
250mV
100mV
-50mV
V(a_equal_b)
550mV
275mV
0mV
V(a_grater_b)
500mV
225mV
-50mV
0ns
20ns
40ns
60ns
80ns
100ns

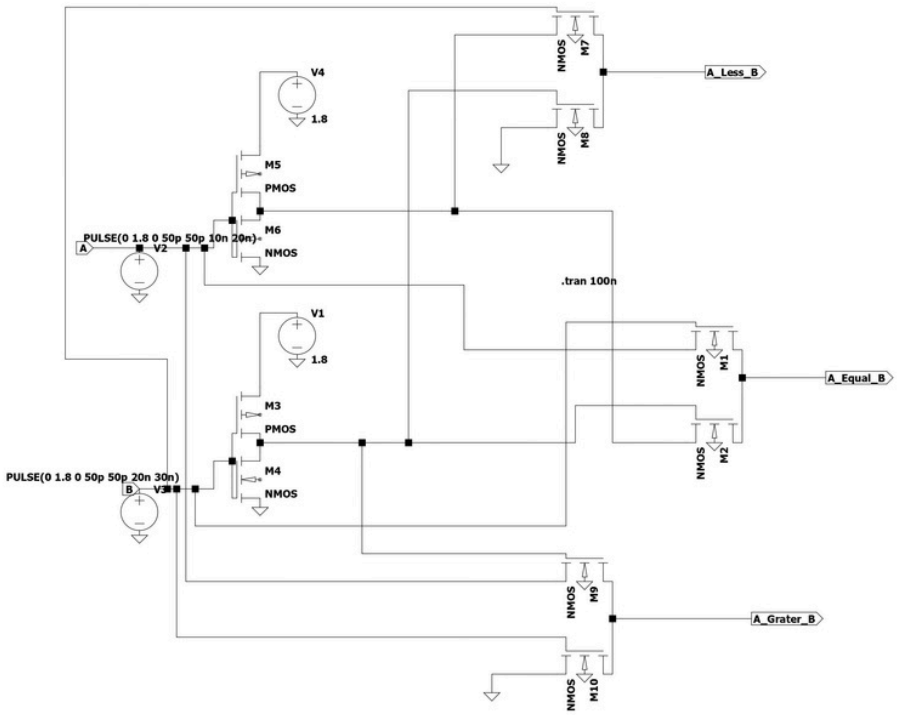
V4
1.8
M5
PMOS
M6
NMOS
PULSE(0 1.8 0 50p 50p 10n 20n)
A
V2
.tran 100n
V1
1.8
M3
PMOS
M4
NMOS
PULSE(0 1.8 0 50p 50p 20n 30n)
B
V3
NMOS
M7
A_Less_B
NMOS
M8
NMOS
M1
A_Equal_B
NMOS
M2
NMOS
M9
A_Grater_B
NMOS
M10

Pass

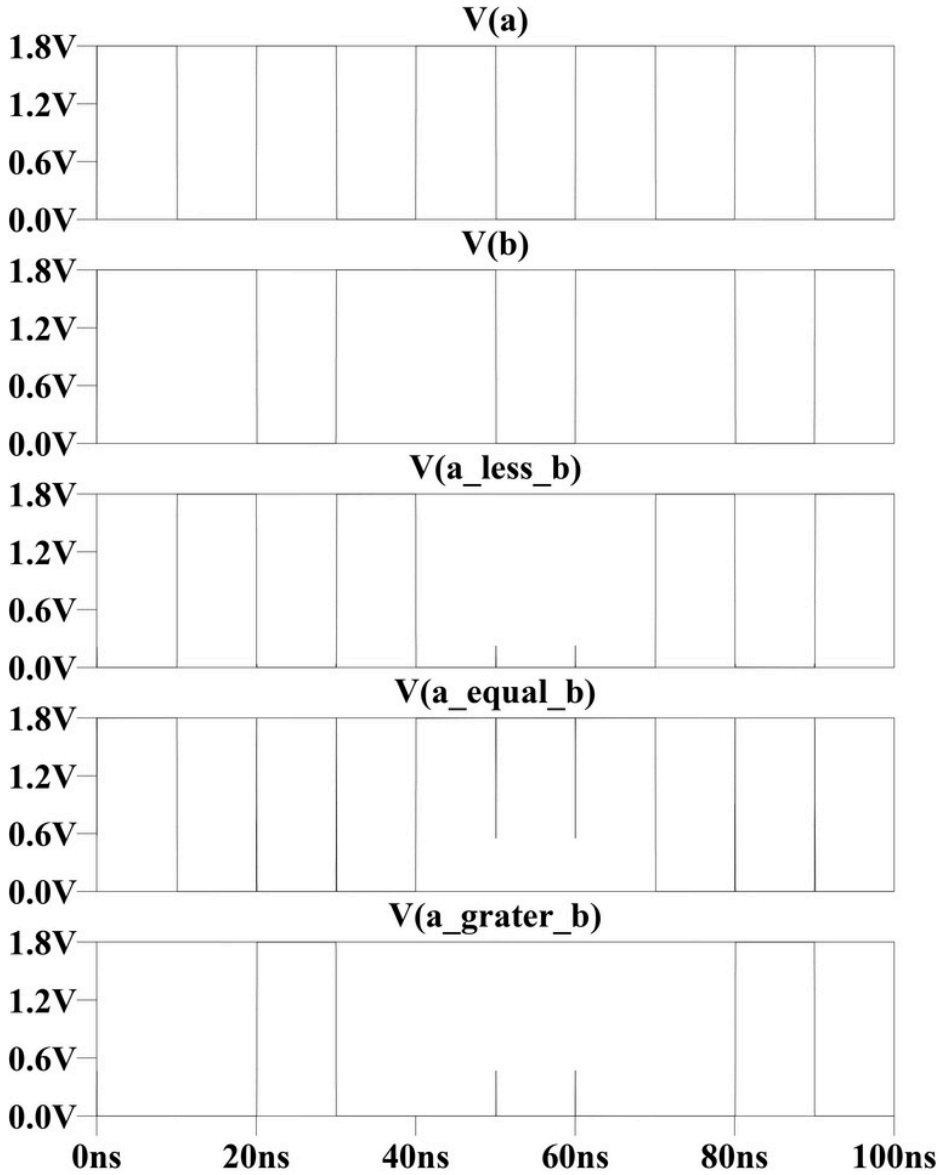
V(a)
1.8V
1.2V
0.6V
0.0V
V(b)
1.8V
1.2V
0.6V
0.0V
V(a_less_b)
1.8V
1.2V
0.6V
0.0V
V(a_equal_b)
1.8V
1.2V
0.6V
0.0V
V(a_grater_b)
1.8V
1.2V
0.6V
0.0V
0ns
20ns
40ns
60ns
80ns
100ns

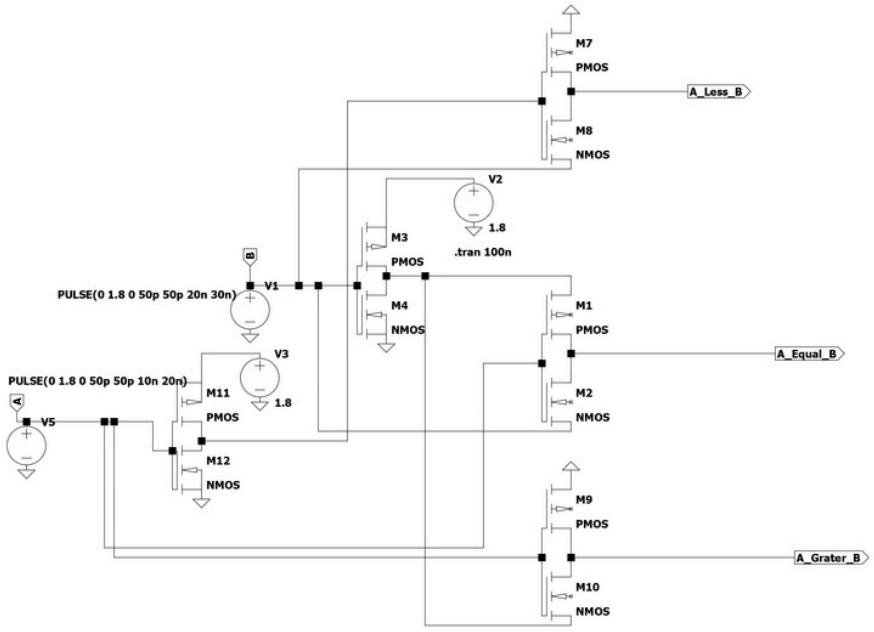
M7
PMOS
A_Less_B
M8
NMOS
V2
1.8
.tran 100n
M3
PMOS
PULSE(0 1.8 0 50p 50p 20n 30n)
V1
M4
NMOS
M1
PMOS
A_Equal_B
V3
PULSE(0 1.8 0 50p 50p 10n 20n)
M11
1.8
M2
NMOS
V5
PMOS
M12
NMOS
M9
PMOS
A_Grater_B
M10
NMOS

GDI

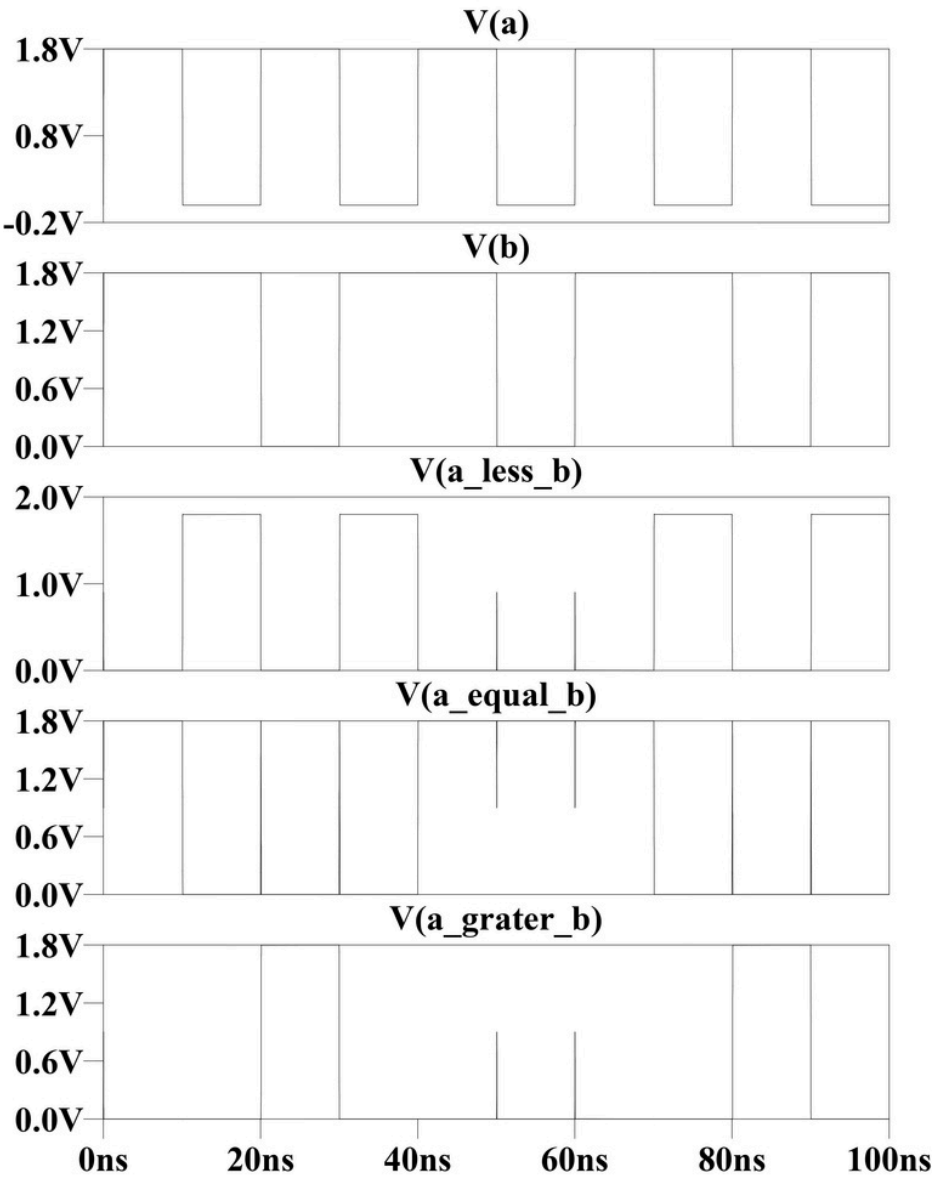
V(a)
1.8V
0.8V
-0.2V
V(b)
1.8V
1.2V
0.6V
0.0V
V(a_less_b)
2.0V
1.0V
0.0V
V(a_equal_b)
1.8V
1.2V
0.6V
0.0V
V(a_grater_b)
1.8V
1.2V
0.6V
0.0V
0ns
20ns
40ns
60ns
80ns
100ns

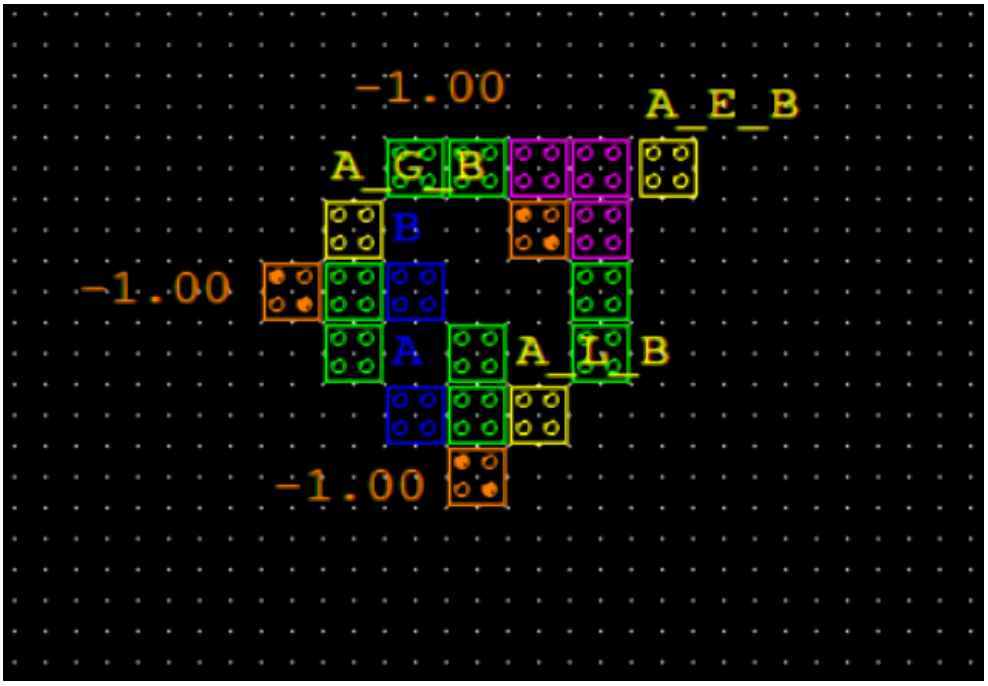
-1.00
A_E_B
A_G_B
B
-1.00
A
A_L_B
-1.00

QCA

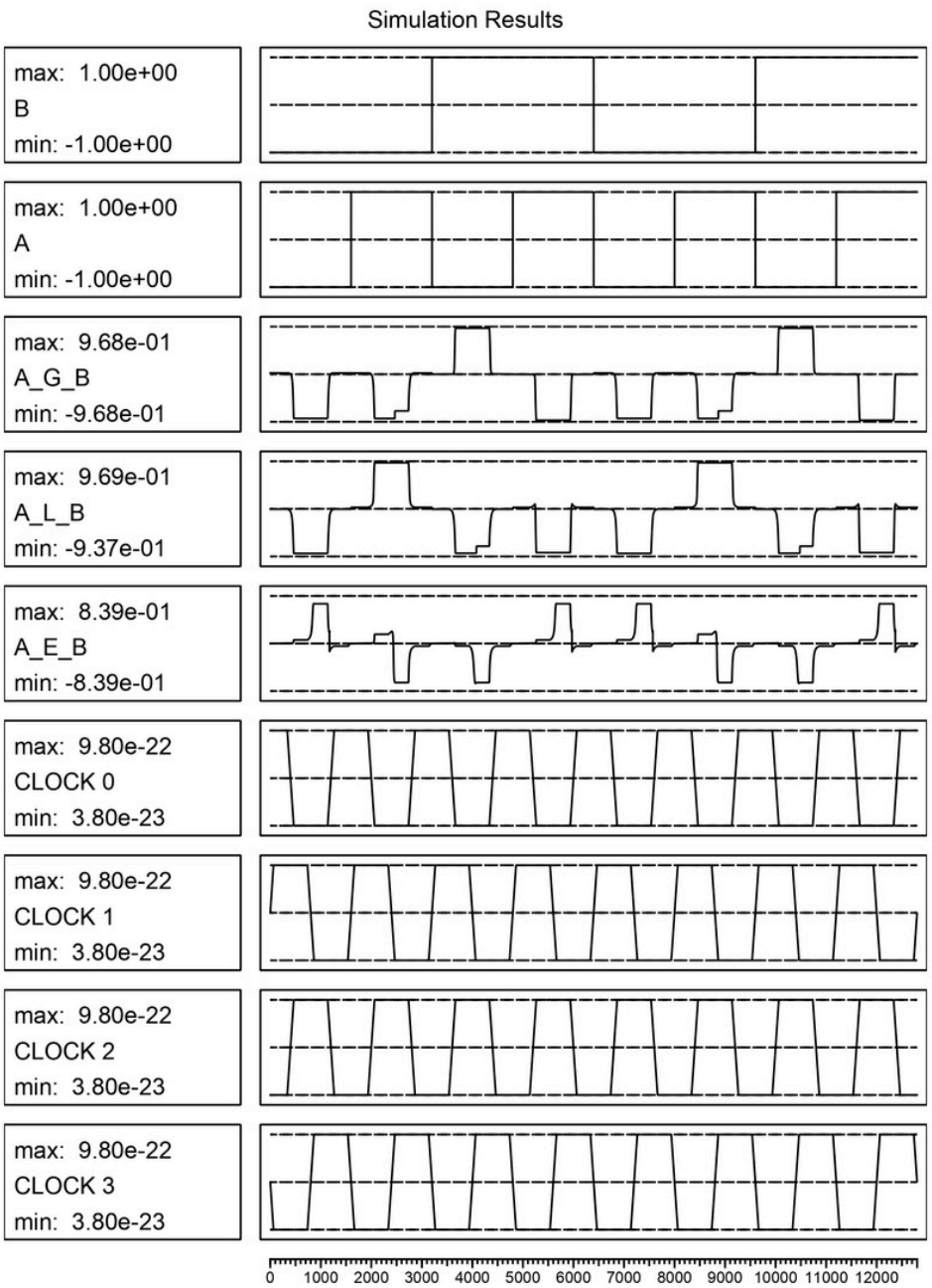
Simulation Results
max: 1.00e+00
B
min: -1.00e+00
max: 1.00e+00
A
min: -1.00e+00
max: 9.68e-01
A_G_B
min: -9.68e-01
max: 9.69e-01
A_L_B
min: -9.37e-01
max: 8.39e-01
A_E_B
min: -8.39e-01
max: 9.80e-22
CLOCK 0
min: 3.80e-23
max: 9.80e-22
CLOCK 1
min: 3.80e-23
max: 9.80e-22
CLOCK 2
min: 3.80e-23
max: 9.80e-22
CLOCK 3
min: 3.80e-23
0 1000 2000 3000 4000 5000 6000 7000 8000 9000 10000 11000 12000

Static

Operating point DC

v(A_less_B) V = 96.139489nv

V(A_Equal_B) V= 1.799999V

V(A_Grater_B_) V = 96.139502nV

Voltage = 1.8v

Transistor Count = 32

Rise Time Fall Time & Differentciate

(A_Less_B) rise time 50.79ns voltage = 544.64mv

Fall Time 609.27297 voltage = 211.81676

Differ 9.3264ns voltage = - 718.36mV

Frequency = 107.2222MHZ

(A_Equal_B) rise time 50.79ns voltage= 1.326124

Fall Time 60.0456 ns voltage = 134.094mv

Differ 30.6994382ns voltage= -1.475435V

Frequency = 32.5784MHz

(A_Grater_B) risetime 30.650685 voltage = 14.71344mV

Fall Time 40.435388 ns voltage = 17.347mV

Differ 10.233167ns , volatge =0V

fequency =97.721579Mhz

Dc Opearting point

V1 = 0A, 0W

V2 = 1A, 0W

V3 = -5.11PA, -9.20PW

V4 = -10.47PA, -18.85PW

V5 = -6.98PA, -12.57PW

V6 = -5.11PA, -9.20 PW

V7 =-10.34PA, -18.61PW

V8 = -5.11PA,-9.20PW

V9 = -6.98 PA, -12.57PW

V10 = -5.17PA, -9.30PW

V11 = -5.17PA,9.30PW

V12 = -5.11PA, 9.20PW

V13 = -6.98PA, 12.57PW